Association for Information Systems
AIS Electronic Library (AISeL)

Research-in-Progress Papers | ECIS 2017 Proceedings

Spring 6-10-2017

DIGITAL TRANSFORMATION IN THE AUTOMOTIVE INDUSTRY: TOWARDS A GENERIC VALUE NETWORK

Tobias Riasanow
Technische Universität München, tobias.riasanow@in.tum.de

Gabriela Galic
Technische Universität München, gabrielagalic@t-online.de

Markus Böhm
Technische Universität München, markus.boehm@in.tum.de

Follow this and additional works at: http://aisel.aisnet.org/ecis2017_rip

Recommended Citation
Riasanow, Tobias; Galic, Gabriela; and Böhm, Markus, (2017). "DIGITAL TRANSFORMATION IN THE AUTOMOTIVE INDUSTRY: TOWARDS A GENERIC VALUE NETWORK". In Proceedings of the 25th European Conference on Information Systems (ECIS), Guimarães, Portugal, June 5-10, 2017 (pp. 3191-3201). ISBN 978-0-9915567-0-0 Research-in-Progress Papers.
http://aisel.aisnet.org/ecis2017_rip/66

This material is brought to you by the ECIS 2017 Proceedings at AIS Electronic Library (AISeL). It has been accepted for inclusion in Research-in-Progress Papers by an authorized administrator of AIS Electronic Library (AISeL). For more information, please contact elibrary@aisnet.org.

DIGITAL TRANSFORMATION IN THE AUTOMOTIVE INDUSTRY: TOWARDS A GENERIC VALUE NETWORK

Research in Progress

Riasanow, Tobias, Technische Universität München, Munich, Germany, tobias.riasanow@in.tum.de
Galic, Gabriela, Technische Universität München, Munich, Germany, gabrielagalic@t-online.de
Böhm, Markus, Technische Universität München, Munich, Germany, markus.boehm@in.tum.de

Abstract

The emergence of digital innovations is accelerating and intervening existing business models by delivering opportunities for new services. Drawing on the automotive industry, leading trends like self-driving cars, connectivity and car sharing are creating new business models. These are simultaneously giving rise for innovative market entrants, which begin to transform the automotive industry. However, literature does not provide a generic value network of the automotive industry, including new market players. The paper aims to visualize the current automotive ecosystem, by evolving a generic value network using the e³-value method. We define different roles, which are operating in the automotive industry by analyzing 650 companies reported in the Crunchbase database and present the value streams within the ecosystem. To validate the proposed generic value network we conducted five preliminary interviews with experts from the automotive industry. Our results show the central role of mobility service platforms, emerging disruptive technology providers and the dissemination of industries, e.g., as OEMs collaborate with mobile payment providers. Scholars in this field can apply the developed generic value network for further research, while car manufacturers may apply the model to position themselves in their market and to identify possible disruptive actors or potential business opportunities.

Keywords: digital transformation, automotive industry, generic value network, e3-value method

1 Introduction

New technologies accelerate digital innovations, which fundamentally transform the daily lives of consumers, companies and the structure of entire ecosystems (Fichman et al., 2014). Today, the digital transformation is even changing the value creation of industries where value is generated exclusively through physical materiality (Yoo et al., 2010), most visible in the automotive industry. Recent digital innovations like self-driving cars, connectivity, big data, and social networks are fundamentally revolutionizing the automotive industry (Wijnen, 2013; Simonji-Elias et al., 2014; Hanelt et al., 2015; Gao et al., 2016). Companies need to be aware of these technologies' disruptive character and adjust their business models to deal with new actors in the ecosystem (Letiche et al., 2008; Perrott, 2008; Möller et al., 2011).

With the emergence of these technologies, platforms and innovative digital services are offered by a plethora of new market entrants, like Tesla, Uber, or ZipCar which threaten the established ecosystem of the automotive industry (Gao et al., 2016). Uber, for instance, which represents the most popular P2P ride sharing platform and was already in 2015 valuated higher than 80 % of the S&P 500 organizations, including General Motors and Ford Motor Company (Verhage, 2015). Due to the rising number of new market entrants, original equipment manufacturers (OEMs) are no more alone in the market and have to align their strategies to compete with these new market entrants, which provide customer-centric mobility for their customers and substantially intervene the current value network (Berman and Bell,

2011; Matt et al., 2015; Gao et al., 2016). Digital transformation strategies are important, because they "reflect the pervasiveness of changes induced by digital technologies throughout an organization" (Chanias and Hess, 2016). Hence, organizations have to change traditional business models, which have been robust for many decades, and transform their organizations to adapt these trends, e.g., car sharing platforms, or new telematics services (Fitzgerald et al., 2013; Lucas et al., 2013).

Currently, OEMs are heavily investing to adapt to these trends. Hence, a business model disruption in the automotive industry is somewhat likely within the next five years (Simonji-Elias et al., 2014). However, it remains unclear which technologies will prevail, leading to tensions in the automotive industry, as OEMs do not want to give up their leadership in product and technology (Simonji-Elias et al., 2014).

However, the transformative impact on industrial-age physical products, especially of the automotive industry, has remained unnoticed in the Information System literature for years (Yoo et al., 2010). Some research has been conducted in the last two years. For instance, Hanelt et al. (2015) identified four business model change types: business model extension, revision, termination, and creation, in the automotive industry. Building on these insights, Remane et al. (2016) detect 27 business model types that were implemented by startups from the mobility sector in the last ten years. However, research is still missing a holistic analysis of the current and ongoing transformation of the automotive industry (Hanelt et al., 2015), as existing studies solely focus on organizations' business models. Therefore, we analyze the digital transformation of the automotive industry from the holistic perspective of its value network. The central advantage of the representation as a value network compared to a business model canvas is to analyze the value streams between all actors in the network. As a first step towards this goal, and to trigger further research, this paper aims to answer the following research questions: *Which generic roles exist and emerge in the value network of the automotive industry? How does the generic value network of the automotive industry look like?* Therefore, we aim towards a generic e^3-value network model based on 15 generic roles we derived from analyzing 650 companies extracted from Crunchbase, a comprehensive database for existing companies and startups.

The remainder of this paper is structured as follows. First, we analyze the underlying literature of digital innovations in the automotive industry, which have been conducted in this field of research. Second, we describe our methodology. As third, the generic roles and the generic value network is presented. Afterwards, we discuss the results and briefly present the implications and outlook.

2 Related Work

Service-dominant logic (S-D Logic) suggests, servitization is one of the key trends in an increasing digitized and interconnected world (Vargo and Lusch, 2004; Lusch and Nambisan, 2015). The theory implies, that services are generated in service ecosystems (actor-to-actor networks), which represent the central theme of S-D Logic. In service ecosystems, value is no longer created by one actor, but increasingly created through cocreation (Lusch and Nambisan, 2015). Therefore, it is crucial to understand the underlying value network of ecosystems.

2.1 From Value Chains to Value Networks

Service ecosystems have their roots in the literature of value chains. The value chain concept was used for the last decades to understand and analyze industries (Stabell and Fjeldstad, 1998). The most established value chain approach is presented by Porter (1985). Traditionally, in the manufacturing industry, value chains are used for visualizing the chained linkage of physical activities (Porter, 1985). The value chain method is applied to analyze competitors and new market entrants (Peppard and Rylander, 2006; Böhm et al., 2010). On account of that, Porter created an extended value chain, namely a value system, which includes the value chains of the firm, of the suppliers, the customers and the end customer, which create interdependencies between the actors of the value system. Value systems are crucial for firms, as by optimization or coordination of the linkages between the actors a firm can create competitive advantage (Connolly and Matarazzo, 2009). But, in a globalized and dynamic world, the explanatory behavior of value chains is limited. Thus, a more complex method is required, which led to value networks (Biem and Caswell, 2008). According to Peppard and Rylander (2006) a value network is a "set of

relatively autonomous units that can be managed independently, but operate together in a framework of common principles and service level agreements (SLAs)". Each actor contributes an incremental value to the network (Bovet and Martha, 2000), but concentrates only on their core competencies (Stabell and Fjeldstad, 1998). Due to the increased connected economy and connected inter-organizational relationships, a value network is an adequate method to visualize inter-organizational exchanges and relationships (Biem and Caswell, 2008). The value network presents functions and activities, which are performed simultaneously. The advantage of a value network is an adequate display of cooperation relationships and alliances. Due to the rising complexity of firm relationships, evoked by digitalization, industries can no longer be classified as suppliers, customers and competitors (Peppard and Rylander, 2006; Pil and Holweg, 2006; Biem and Caswell, 2008; Böhm et al., 2010). Today, digitalization is changing value networks and affecting physical products. Therefore, the value network concept is now used for service oriented and non-physical industries (Peppard and Rylander, 2006). Due to digitalization the digital and physical world are merging (Hanelt et al., 2015). Particularly relevant for this paper, we use the holistic value network approach because the most popular digital innovations and changes can be currently observed in the automotive industry (Berman and Bell, 2011; Gao et al., 2016).

2.2 Digital Transformation in the Automotive Industry

For the automotive industry, literature focused on different aspects of the digital transformation, starting from an overview of the different business model changes types (Hanelt et al., 2015) for specific transformation strategies. Hanelt et al. (2015) combine the phenomena of digital and physical world and explore the impact of digital trends on the business model of the automotive industry. Their findings show four different business model change types: extension, revision, termination and creation. Examples for business model extension are interactive elements with customers, e.g., through social media. Business model revision is required through self-driving cars, which reflects a combination of physical and digital components. Termination of business models may occur through virtualization, e.g. virtual showrooms for sales distribution may terminate the business of car dealers. Finally, business model creation can be achieved through new driver services and new data services. Investigating the strategy for digital transformation, Chanias and Hess (2016) examined existing challenges of the digital transformation in the automotive industry. Therefore, they conducted a case study for the formation of strategies due to digital transformation according to the activity-based process model (Chanias and Hess, 2016). Their findings show, digital transformation primarily begins through a multitude of organizational activities from a bottom up perspective, even before top management initiated a holistic strategy. Hildebrandt et al. (2015) found that digital technology-related merger and acquisitions (M&As) have a positive impact on digital business model innovations. OEMs have to acquire external knowledge by M&As to capture the potential of digital innovations (Henfridsson and Lind, 2014). The emerging digital ecosystem, an OEM is surrounded by, is a "key success factor of IT-enabled business models" (Hildebrandt et al., 2015). Their results show, that openness towards external market players and knowledge will support the digital innovations (Hildebrandt et al., 2015). According to the theory of disruptive innovations, digital innovations increase business performance and result in better user experience (Keller and Hüsig, 2009). As external knowledge plays therefore an important role it is crucial to analyze the entire ecosystem of the automotive industry. Piccinini et al. (2015) conducted a Delphi study with industry experts to grasp the emerging challenges which come in line with digital transformation of the physical automotive industry. For digital ecosystems, among these are: competing with an expanding range of new rivals and non-industry rivals and entrants; building complementary partnerships among different ecosystem players (business and IT) to design new business models; bridging gaps between previously separated business units and ecosystem players to create new digital value; improving information flows and exchange between business ecosystem partners to enable a seamless customer experience (Piccinini et al., 2015). Drawing on organizational ambidexterity, they show organizations need to simultaneously exploit current resources while exploring promising capabilities (Gregory et al., 2015). Most recently, Remane et al. (2016) analyzed the business models of emerging and current startups in the mobility sector . They used Crunchbase data to classify startups by business model types according to Weill et al. (2005). They identified 27 different business model types, and organized them

in four clusters: creator, distributor, landlord and broker. However, research is missing a detailed actor-to-actor analysis of the current and ongoing transformation of the automotive industry (Hanelt et al., 2015), as existing studies solely focus on organizations' business models. Thus, we analyze the digital transformation of the automotive industry from the holistic perspective of its value network. To achieve this, we aim to identify generic roles and the value streams between them.

3 Research Approach

We conducted a three-step research approach. First, we identified the roles and values streams between them. Second, we visualized the generic value network based on the identified roles and value streams. Third, we validated the model with preliminary semi-structured expert interviews.

For the first step, we decided to use Crunchbase data in order to derive the roles in the value network. Crunchbase possesses a comprehensive database for existing companies and startups (Marra et al., 2015) including a description of organizations' value propositions. Crunchbase contains startups at all funding stages, which enables researchers to capture new business model innovations in emerging markets (Marra et al., 2015; Perotti and Yu, 2015). We extracted all organizations listed on October 20, 2016. To collect all organizations of the automotive industry as well as related technologies, we filtered the Crunchbase category list by the search term "automotive", which led to a sample size of 728 funded companies, which includes 77 initial public offerings (IPOs). This led us to capture established and emerging organizations, which are representative for the current automotive industry. We excluded 15 companies, which have been "closed" so far, for example WhipCar, a London-based car sharing service. Furthermore, we had to exclude three organizations from our coding, as the listed website did not exist anymore. Screening the data, we found companies, which had no relationship to the automotive industry, e.g., Eni, an energy company that engages in oil and natural gas exploration. Hence, we shortened the data set by 60 companies. With the remaining 650 organizations we conducted in a first step a structured content analysis, including an inductive category development based on Mayring (2010) and Miles and Huberman (1994). With this method, we identified a set of 15 generic roles. We established inter-coder reliability to ensure consistent coding. Two experienced raters independently coded the 650 organizations. Before the raters started coding the organizations from Crunchbase, both raters coded several organizations to become familiar with the coding scheme and then compared their coding for calibration purposes. All authors confirmed the final coding of each organization and discussed the coding discrepancies until we reached a consensus; this helped to eliminate individual disparities (Bullock and Tubbs, 1990). For example, we coded Vroom based on its description *"Vroom is an online direct car retailer that makes car-buying and -selling fast and easy"* as car dealer. We used the same approach for the identification of the value streams, but combined the Crunchbase information with secondary publicly available information from company websites, reports, press articles or annual reports. For example, we coded the value streams between OEMs and tier suppliers as exchange of technology (hardware and software) and money based on the quote *"Continental's five largest OEM customers (Daimler, Fiat-Chrysler, Ford, General Motors, and VW) generated approximately 43% of the Continental Corporation's sales in 2016"* in Continental's recent annual report (Continental AG, 2016). After both raters completed the coding, we used Krippendorff's (2004) Alpha to determine inter-coder reliability. The results indicated an Alpha of 0.87, reflecting an acceptable inter-coder reliability (Krippendorff, 2004).

In the second step, we use the e^3-value method to visualize the value network of the automotive industry based on the identified generic roles and the value streams between the generic roles. The e^3-value method is a business modeling methodology to elicit, analyze, and evaluate business ideas from an ecosystem perspective. It is used to evaluate economic sustainability of value networks by modelling the exchange of things of economic value between actors (Gordijn and Akkermans, 2003).

In the third step, we conducted five preliminary interviews with experts from the automotive industry to validate the generic value network. We used a semi-structured technique (Myers and Newman, 2007) to interview two CEOs of value added partners, a CEO of an OEM's technology subgroup, a department manager of another OEM, and a senior consultant with a major in IS applications for the automotive industry. Each of the experts has a minimum of ten years' experience in the automotive industry and in

new digital technologies. The interviewees are either working in a leading strategic position or information technology related function (Goldberg et al., 2016), who have privileged access to information and knowledge on the subject (Bogner et al., 2009). This allowed drawing from a broad knowledge on long-time market experience and different customer insights from various companies. We conducted the interviews between December and March 2017. The interviews were recorded and transcribed afterwards took 41 minutes on average. To validate the generic roles and value streams, we discussed the roles and value streams of the proposed generic value network with the experts.

4 Towards a Generic Value Network for the Automotive Industry

Due to digital innovations, the automotive industry is transforming and is giving rise to a set of new market players in the resulting value network. Following the approach of Böhm et al. (2010), we abstract the definition of market players and actors, which offer similar services and products to customers, and define generic roles based on the structured content analysis of the Crunchbase data of 650 organizations, see Table 1.

Role	**Description**	**Example(s)**
OEM	The original equipment manufacturer (OEM) produces cars. We assume an OEM manufactures traditional combustion engines as well as electro vehicles (EV). The value proposition of OEMs can include direct sales, R&D, manufacturing, after sales, and services (Kang et al., 2009).	Ferrari, Tesla, Cadillac, BMW, Daimler, Bolt Motorbikes
Consumer	Consumers request mobility, which can be fulfilled in many forms like driving an own car, lending or sharing a car as well as using public transportation or a specific mobility service like Uber. Customers may use products or services before, during or after transportation. In some contexts, a consumer is a *Prosumer*, by simultaneously using and creating a service. An example is sharing personal data via smartphone with Google Maps while using the aggregated real-time traffic information of other users for navigation. Consumers can pay for services with money, data or a combination of both.	
Tier 1-3 Supplier	The traditional automotive industry is characterized by a one-sided supplier-buyer relation (Turnbull et al., 1992). Vehicle manufacturers rely heavily on *first tier* suppliers, which approximately supply 85 percent of the parts. First tier supplier may offer product development, design and technology and many depend on subcontractors, namely *second tier* suppliers. These in turn can depend on *third tier* contractors, which e.g., supply press, cutting, welding, forging or casting work.	Bosch, Continental, Faurecia, China Automotive Systems, Hyundai Mobis, ABC Group
Public Transportation Provider	This role represents the traditional public transportation, including underground station, busses, city bikes and trains (Hoffmann et al., 2016).	New York MTA, citibike
Car Rental Provider	A car rental provider offers different models for renting a car (Moeller and Wittkowski, 2010).	Sixt, Hertz
Car (parts) Dealer	Apart from directly purchasing from OEMs, consumers can purchase from car (or car parts) dealers. Cars and spare parts can be also sold via online platforms of the respective dealers (Applegate, 2001).	LUEG, Amazon (Fiat), carparts.com
Disruptive Technology Provider	Disruptive technology providers offer disruptive innovations to OEMs in form of software and hardware, such as sensors for assisted driving. Following Christensen (1997), disruptive technologies may be inferior to established technologies in the beginning. However, disruptive technologies move up market relentlessly, leading to the elimination or replacement of established technologies (Christensen, 1997).	Savari, Intel, Mobileye,
Mobility Service Platform	We distinguish between different mobility service platforms, such as private or commercial car sharing, P2P-Lending, or service platforms from	Uber, VRide, DriveNow, Tesloop, Taxify, Car2Go

	OEMs (Lee et al., 2016). Mobility services can be accessed and distributed via these platforms, e.g. Uber provides the platform that allows drivers to provide their mobility service to registered users.	
Mobility Service Aggregator	This role aggregates different mobility services, including public transport services and car sharing platforms, which may also imply intermodal mobility services (Plummer and Kenney, 2009).	Moovel, Flare
Intelligent Infrastructure Provider	This role represents the connection of physical and digital infrastructure. Due to connectivity and new technologies, e.g., sensors and electric vehicles (EV), the infrastructure, e.g., including traffic signs or parking lots can be connected to cars and consumers. Electric vehicle charging stations (EVCS) is such an intelligent infrastructure. Providers allow to access if they are currently used or free, for example.	ChargeNow, CarCharging, Chargerlink
Cloud Infrastructure Provider	A cloud infrastructure provider (IaaS), consists of a shared pool of Internet-based configurable computing resources (e.g. servers, storage, applications and services), which can be rapidly provisioned and released with minimal management effort (Youseff et al., 2008).	Amazon Elastic Compute Cloud (Amazon EC2)
Cloud Platform Provider	The cloud platform provider (PaaS) offers a digital marketplace of various cloud infrastructure services. The key objective is to connect customers and service providers. The former can search for suitable value added services, telematics services and in-car apps while the value added provider can advertise its services. The platform is built on underlying cloud infrastructure (Youseff et al., 2008).	Google Cloud Platform, Microsoft Azure
Value Added Service Provider	Value added services can be accessed before, during, or after transportation. Two types of value added service providers (SaaS) exist. First are telematics services, or technical information about the vehicle, safety features or intelligent driver assistance software. Second are services, which offer complex digital services to the customer, e.g., entertainment, security, location based information services or concierge services. These services can be access via cloud platforms (Youseff et al., 2008).	Spotify, Data Crossover, Autolinked, ParkNow, OnStar, BMW Connected Drive
Car Service Provider	Car services include all traditional services, such as maintenance, insurance, or stationary services like car wash (Remane et al., 2016).	Washtec
E-Payment Provider	Provision of payments, which also work for mobile devices or cars.	MercedesPay

Table 1. Generic Roles of the Actors in the Value Network of the Automotive Industry

As our roles are on a more abstract level than business models, on role can refer to different business model types. Further, one company can act in different roles by offering different services to other players.

We compared our identified roles with the business model types of Remane et al. (2016) and found examples for each business model type in our generic roles. For example, we aggregated the business model types ‘digital service provider’ and ‘sensor-enabled service innovator’ in our generic role value added service provider due to similar value streams in the value network. Second, we used the e3-value method to propose a generic value network of the automotive industry, see Figure 1. It depicts the identified roles and the value streams between them, we validated through five preliminary expert interviews.

Roles create value within the value network by providing data, services and physical products (car, rental car, spare parts, and technology). By drawing on publicly accessible information on the companies’ websites, we identified the following value streams regarding services: car as a service (CaaS), software as a service (SaaS) and mobility as a service (MaaS).

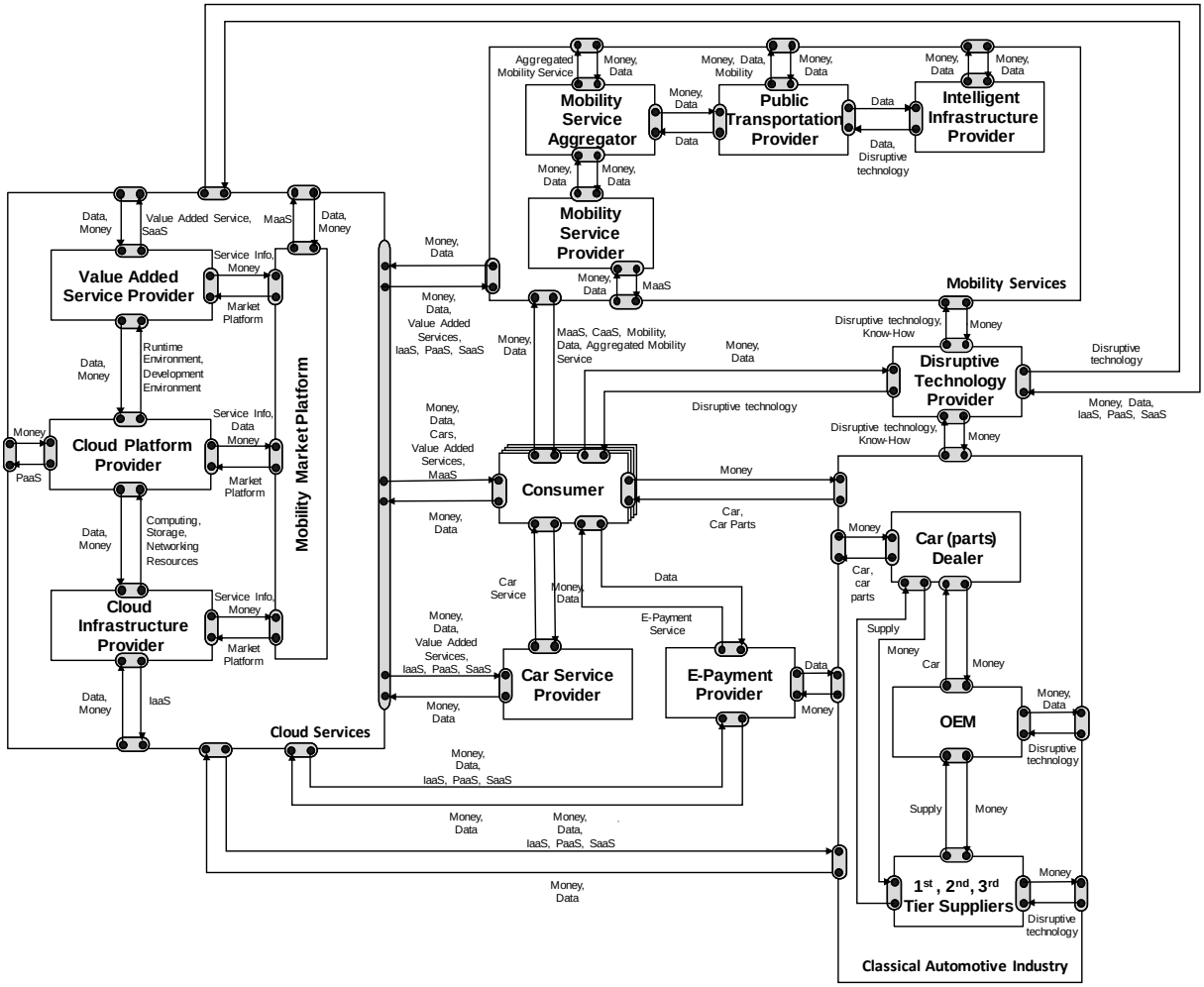

Figure 1. Proposed Generic Value Network for the Automotive Industry

Further, we integrated the cloud computing perspective of Böhm et al. (2010), by accounting for platform as a Service (PaaS), infrastructure as a Service (IaaS). Further, the service layer of cloud computing was framed as value-added services here, e.g. BMW Connected Drive. Naturally, products and services are exchanged in favor of money or data. The center of the value network is the consumer, who demands a MaaS, CaaS, SaaS or buys or rents a physical product (car, rental car, spare parts).

The generic value network shows that the automotive industry transformed to a multi-sided value network, and thus moves away from the traditional one-sided supplier-buyer business model. Thus, we can confirm the conclusion of Remane et al. (2016) that new roles are emerging, for example mobility service platforms, or intelligent infrastructure providers. Based on the findings of the proposed model, emerging roles threaten the value creation of OEMs from two sides. On one hand, the generic value network shows the automotive industry is being intervened through mobility service platforms, like Uber, which directly offer mobility services to the customers. Therefore, OEMs may gradually lose the customer touchpoint. On the other hand, trends like self-driving cars force OEMs to cooperate emerging players. This is represented by the central role of disruptive technology providers between OEMs and mobility services, e.g., Mobileye and Intel in the case of BMW. Therefore, OEMs have to be open to new market entrants and need to gain external knowledge to foster innovation (Hildebrandt et al., 2015). This is particularly helpful in order to enhance the user experience (Keller and Hüsig, 2009). The generic value network also highlights the creation of new data-driven roles due to digital innovations, e.g., as intelligent infrastructure providers share real-time traffic information with self-driving cars. Finally, the expert interviews showed the increasing diffusion of mobility services through digital technology as one expert suggested to incorporate the role e-payment providers in the value network. For example, Daimler

acquired an electronic payment provider for mobile payments which is now implemented as 'MercedesPay' for mobility services, such as Car2Go or as virtual wallet for customers' smartphones (Daimler AG, 2017).

5 Conclusion and Outlook

This paper presents a generic value network for the automotive industry based on 15 generic roles identified by a structured content analysis of the Crunchbase data of 650 automotive organizations. Preliminary findings are that digital transformation creates new roles for value creation in the automotive industry. The value network shows that mobility service platforms and disruptive technology providers penetrate the market and therefore threaten the value creation of OEMs from two sides simultaneously.

The model is limited by the information provided by the Crunchbase database and our coding of the generic roles. Drawing on the value streams between the roles, we relied on publicly available information, such as company websites, reports, press articles or annual reports. Further, we conducted five preliminary semi-structured interviews with experts from the automotive industry to validate the proposed generic value network based on the identified roles and value streams. However, a deeper analysis of the value streams should be conducted which also relies on quantitative information, such as the Crunchbase database.

Scholars can apply the developed generic value network for further research, particularly for understanding digital transformation. Practitioners, e.g., OEMs can apply the model to identify potential threats to their current market position and potential opportunities to adapt to trends or shifts in customer needs. As example, innovative OEMs introduced car-sharing platforms early, like BMW with Drive Now, or more recently, Mercedes acquired a mobile payment provider to enhance their digital portfolio (Daimler AG, 2017). Hence, companies can use the generic value network to analyze their position in the automotive industry and their linkages to competitors or partners. However, according to Böhm et al. (2010) it is not necessarily important to know, which generic role might take the largest share within the value network, but to develop a unique value proposition based on core competencies.

Due to its novelty, future research should investigate the intelligent infrastructure provider and monitor roles, reflecting them in practice to potentially extend the generic value network. Moreover, a complete case study of the transformation of an OEM would be particularly helpful to understand the full extent of digital transformation.

Acknowledgments

This work is part of the Initiative for Digital Transformation (IDT) and the TUM Living Lab Connected Mobility (TUM LLCM) project and has been partly funded by SAP SE and the Bavarian Ministry of Economic Affairs and Media, Energy and Technology (StMWi) through the Center Digitisation.Bavaria, an initiative of the Bavarian State Government.

References

Applegate, L. M. (2001). *E-business Models: Making Sense of the Internet Business Landscape*. Upper Saddle River, NJ, Prentice Hall.

Berman, S. J. and R. Bell (2011). *Digital Transformation: Creating New Business Models where Digital Meets Physical*, IBM Institute for Business Value.

Biem, A. and N. Caswell (2008). "A Value Network Model for Strategic Analysis". *Proceedings of the 41st Hawaii International Conference on System Science (HICSS)*, Waikoloa, HI.

Bogner, A., B. Littig and W. Menz (2009). Introduction: Expert Interviews—An Introduction to a New Methodological Debate. New York, NY, Springer**:** 1-13.

Böhm, M., G. Koleva, S. Leimeister, C. Riedl and H. Krcmar (2010). "Towards a Generic Value Network for Cloud Computing". *International Workshop on Grid Economics and Business Models*, Ischia, IT.

Bovet, D. and J. Martha (2000). *Value Nets: Breaking the Supply Chain to Unlock Hidden Profits*. New York, NY, John Wiley & Sons.

Bullock, R. and M. E. Tubbs (1990). "A Case Meta-analysis of Gainsharing Plans as Organization Development Interventions." *The Journal of Applied Behavioral Science* 26(3): 383-404.

Chanias, S. and T. Hess (2016). "Understanding Digital Transformation Strategy Formation: Insights from Europe's Automotive Industry". *Proceedings of the 20th Pacific Asia Conference on Information Systems (PACIS)*, Chiayi, Taiwan.

Christensen, C. M. (1997). *The Innovator's Dilemma: When New Technologies Cause Great Firms to Fail*. Boston, MA, Harvard Business School Press.

Connolly, S. and J. Matarazzo (2009). *Knowledge and Special Libraries*. London, UK, Routledge.

Continental AG. (2016). *Annual Report 2016*. Retrieved at 09.04.2017, from http://www.continental-corporation.com/www/download/portal_com_en/themes/ir/financial_reports/download/annual_report_2016_en.pdf.

Daimler AG. (2017). *ePayment-Investition: Daimler Financial Services übernimmt PayCash Europe SA*. Retrieved at 31.03.2017, from http://media.daimler.com/marsMediaSite/ko/de/15310294.

Fichman, R. G., B. L. Dos Santos and Z. Zheng (2014). "Digital Innovation as a Fundamental and Powerful Concept in the Information Systems Curriculum." *MIS Quarterly* 38(2): 329-343.

Fitzgerald, M., N. Kruschwitz, D. Bonnet and M. Welch (2013). "Embracing Digital Technology: A New Strategic Imperative." *Sloan Management Review* 55(2): 1-13.

Gao, P., N. Müller, H.-W. Kaas, D. Mohr, D. Wee, R. Hensley, M. Guan, T. Möller, G. Eckhard, G. Bray, S. Beiker, A. Brotschi and D. Kohler (2016). Automotive Revolution Rerspective Towards 2030, McKinsey Report.

Goldberg, M., G. Satzger and H. Fromm (2016). "Adapting IT Service Management for Successful Multi-sourcing Service Integration". *Proceedings of the 24th European Conference on Information Systems (ECIS)*, Istanbul, Turkey.

Gordijn, J. and J. Akkermans (2003). "Value-based Requirements Engineering: Exploring Innovative E-commerce Ideas." *Requirements Engineering* 8(2): 114-134.

Gregory, R. W., M. Keil, J. Muntermann and M. Mähring (2015). "Paradoxes and the Nature of Ambidexterity in IT Transformation Programs." *Information Systems Research* 26(1): 57-80.

Hanelt, A., E. Piccinini, R. W. Gregory, B. Hildebrandt and L. M. Kolbe (2015). "Digital Transformation of Primarily Physical Industries-Exploring the Impact of Digital Trends on Business Models of Automobile Manufacturers". *12. Internationalen Tagung Wirtschaftsinformatik*, Osnabrück, Germany.

Henfridsson, O. and M. Lind (2014). "Information Systems Strategizing, Organizational Sub-communities, and the Emergence of a Sustainability Strategy." *Journal of Strategic Information Systems* 23(1): 11-28.

Hildebrandt, B., A. Hanelt, S. Firk and L. Kolbe (2015). "Entering the Digital Era–The Impact of Digital Technology-related M&As on Business Model Innovations of Automobile OEMs". *Proceedings of the 36th International Conference on Information Systems (ICIS)*, Fort Worth, TX.

Hoffmann, K., P. Ipeirotis and A. Sundararajan (2016). "Ridesharing and the Use of Public Transportation". *Proceedings of the 37th International Conference on Information Systems (ICIS)*, Dublin, Ireland.

Kang, M. P., J. T. Mahoney and D. Tan (2009). "Why Firms make Unilateral Investments Specific to other Firms: The Case of OEM Suppliers." *Strategic Management Journal* 30(2): 117-135.

Keller, A. and S. Hüsig (2009). "Ex Ante Identification of Disruptive Innovations in the Software Industry Applied to Web Applications: The Case of Microsoft's vs. Google's Office Applications." *Technological Forecasting and Social Change* 76(8): 1044-1054.

Krippendorff, K. (2004). *Content Analysis: An Introduction to its Methodology*. Thousand Oaks, CA, Sage.

Lee, Z. W., T. K. Chan, M. Balaji and A. Y.-L. Chong (2016). "Technology-Mediated Sharing Economy: Understanding User Participation in Collaborative Consumption through the Benefitcost Perspective". *Proceedings of the 20th Pacific Asia Conference on Information Systems (PACIS)*, Chiayi, Taiwan.

Letiche, H., R. v Boeschoten, S. Dugal and M. Eriksen (2008). "Leading Adaptive Organizational Change: Self-reflexivity and Self-Transformation." *Journal of Organizational Change Management* 21(5): 622-640.

Lucas, H. C., R. Agarwal, E. K. Clemons, O. A. El Sawy and B. W. Weber (2013). "Impactful Research on Transformational Information Technology: An Opportunity to Inform New Audiences." *MIS Quarterly* 37(2): 371-382.

Lusch, R. F. and S. Nambisan (2015). "Service Innovation: A Service-Dominant Logic Perspective." *MIS Quarterly* 39(1): 155-175.

Marra, A., P. Antonelli, L. Dell'Anna and C. Pozzi (2015). "A Network Analysis using Metadata to Investigate Innovation in Clean-tech–Implications for Energy Policy." *Energy Policy* 86: 17-26.

Matt, C., T. Hess and A. Benlian (2015). "Digital Transformation Strategies." *Business & Information Systems Engineering* 57(5): 339-343.

Mayring, P. (2010). *Qualitative Inhaltsanalyse*. Wiesbaden, Germany, VS Verlag für Sozialwissenschaften: 601-613.

Miles, M. B. and A. M. Huberman (1994). *Qualitative Data Analysis: An Expanded Sourcebook*. Newbury Park, CA, Sage.

Moeller, S. and K. Wittkowski (2010). "The Burdens of Ownership: Reasons for Preferring Renting." *Managing Service Quality: An International Journal* 20(2): 176-191.

Möller, D., C. Legner and A. Heck (2011). "Understanding IT Transformation- An Explorative Study". *Proceedings of the 19th European Conference on Information Systems (ECIS)*, Helsinki, Finland.

Myers, M. D. and M. Newman (2007). "The Qualitative Interview in IS Research: Examining the Craft." *Information and Organization* 17(1): 2-26.

Peppard, J. and A. Rylander (2006). "From Value Chain to Value Network: Insights for Mobile Operators." *European Management Journal* 24(2): 128-141.

Perotti, V. and Y. Yu (2015). "Startup Tribes: Social Network Ties that Support Success in New Firms". *Proceedings of the 21st Americas Conference on Information Systems (AMCIS)*, Puerto Rico

Perrott, B. E. (2008). "Towards a Model of Transformation: Manager's Perceptions of Transformation in an E-business Environment." *Journal of Information & Knowledge Management* 7(02): 63-74.

Piccinini, E., A. Hanelt, R. Gregory and L. Kolbe (2015). "Transforming Industrial Business: The Impact of Digital Transformation on Automotive Organizations". *Proceedings of the 36th International Conference on Information Systems (ICIS)*, Fort Worth, TX.

Pil, F. K. and M. Holweg (2006). "Evolving from Value Chain to Value Grid." *Sloan Management Review* 47(4): 72-80.

Plummer, D. C. and L. F. Kenney (2009). "Three Types of Cloud Brokerages will Enhance Cloud Services." *Gartner Special Report on Cloud Computing*.

Porter, M. E. (1985). *Competitive Advantage: Creating and Sustaining Superior Performance*. New York, NY, FreePress.

Remane, G., B. Hildebrandt, A. Hanelt and L. M. Kolbe (2016). "Discovering New Digital Business Model Types - A Study of Technology Startups from the Mobility Sector". *Proceedings of the 20th Pacific Asia Conference on Information Systems (PACIS)*, Chiayi, Taiwan.

Simonji-Elias, M., M. Collyer, M. Johnston, L. Lichtenfeld, J. Lund and J. Staiger (2014). *KPMG's Global Automotive Executive Survey 2014*. KPMG International, KPMG International.

Stabell, C. B. and Ø. D. Fjeldstad (1998). "Configuring Value for Competitive Advantage: on Chains, Shops, and Networks." *Strategic Management Journal* 19: 413-437.

Turnbull, P., N. Oliver and B. Wilkinson (1992). "Buyer-supplier Relations in the UK-automotive Industry: Strategic Implications of the Japanese Manufacturing Model." *Strategic Management Journal* 13(2): 159-168.

Vargo, S. L. and R. F. Lusch (2004). "Evolving to a New Dominant Logic for Marketing." *Journal of Marketing* 68(1): 1-17.

Verhage, J. (2015). *Uber Is Now Valued Higher Than 80% of the Companies in the S&P 500*. Retrieved at 21.11.2016, from https://www.bloomberg.com/news/articles/2015-12-03/uber-s-latest-funding-round-gives-it-a-larger-valuation-than-80-percent-of-the-s-p-500.

Weill, P., T. W. Malone, V. T. D'Urso, G. Herman and S. Woerner (2005). "Do some Business Models Perform Better than Others? A Study of the 1000 Largest US Firms." *MIT Center for Coordination Science Working Paper*.

Wijnen, R. (2013). *New Business Models in the Car Industry*. Retrieved at 09.08.2016, from http://www.businessmodelsinc.com/new-business-models-in-the-car-industry/#sthash.MEkq2LL8.dpuf.

Yoo, Y., O. Henfridsson and K. Lyytinen (2010). "Research Commentary: The New Organizing Logic of Digital Innovation: An Agenda for Information Systems Research." *Information Systems Research* 21(4): 724-735.

Youseff, L., M. Butrico and D. Da Silva (2008). "Toward a Unified Ontology of Cloud Computing". *2008 Grid Computing Environments Workshop*.